SoulLight

2026

Akustik koleksiyon

# Akustik

Acoustic Lighting Solutions

Bright & Quiet

www.soullight.com.tr

Soullight
LIGHTING & PROJECTS

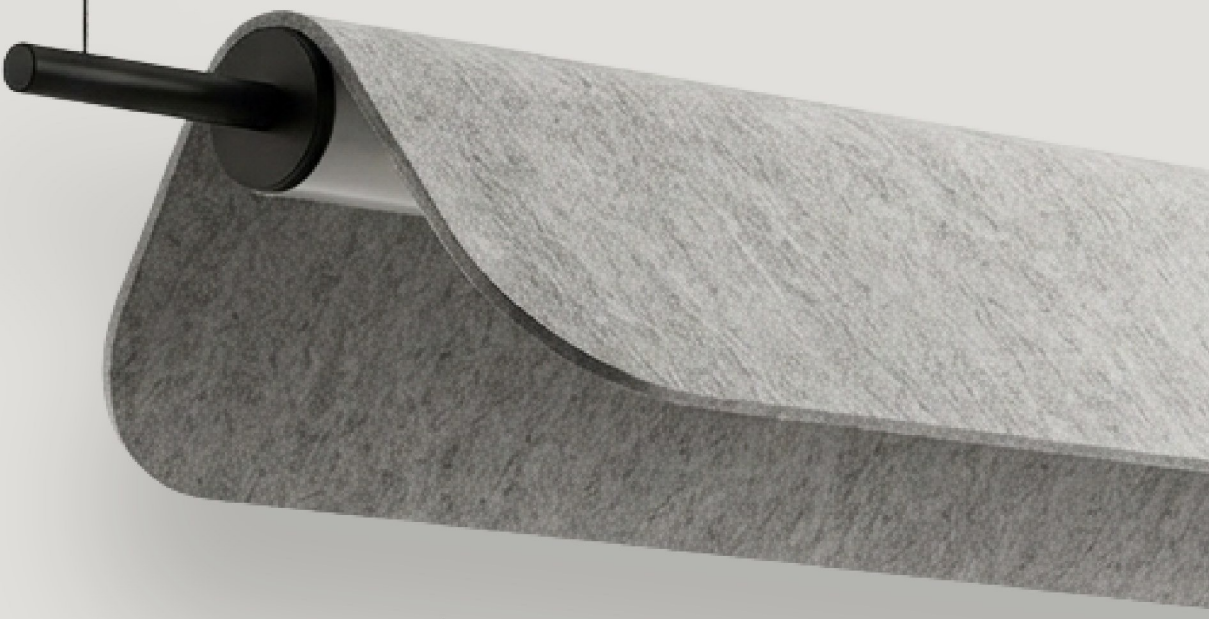



*Pendant*

# *Vela*

| TR / EN / FR | |
|---|---|
| ÖLÇÜ / DIMENSION / MESURES | 1200 × 280 x 158mm |
| GÜÇ / CONSUMPTION / CONSOMMATION | 40 W |
| IŞIK AKISI / LUMINOUS FLUX / FLUX LUMINEUX | 3000 lm |
| OPTİK / OPTICS / OPTIQUE | Opal Diffuser |
| KORUMA / PROTECTION / PROTECTION | IP20 · IK02 · Class II |



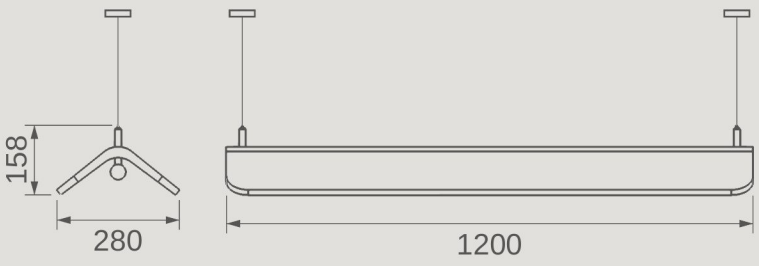

Soullight
LIGHTING & PROJECTS









*Pendant*

# *Arqua*

| TR / EN / FR | |
|---|---|
| ÖLÇÜ / DIMENSION / MESURES | 800 × 525 mm |
| GÜÇ / CONSUMPTION / CONSOMMATION | 35 · 50 W |
| IŞIK AKISI / LUMINOUS FLUX / FLUX LUMINEUX | 2800 · 4000 lm |
| OPTİK / OPTICS / OPTIQUE | Opal Diffuser |
| KORUMA / PROTECTION / PROTECTION | IP20 · IK02 · Class II |



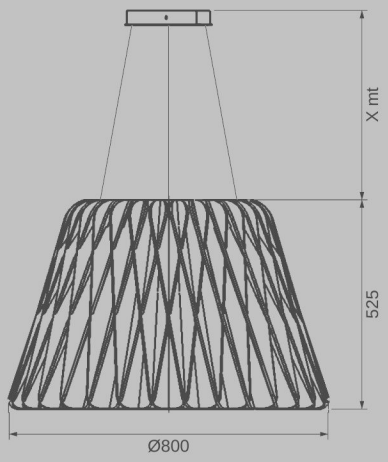

Soullight
LIGHTING & PROJECTS



*Pendant*

# *Strato*

| TR / EN / FR | |
|---|---|
| ÖLÇÜ / DIMENSION / MESURES | **450/700 x 260/400 mm** |
| GÜÇ / CONSUMPTION / CONSOMMATION | **35 · 50 W** |
| IŞIK AKISI / LUMINOUS FLUX / FLUX LUMINEUX | **2800 · 4000 lm** |
| OPTİK / OPTICS / OPTIQUE | **Opal Diffuser** |
| KORUMA / PROTECTION / PROTECTION | **IP20 · IK02 · Class II** |



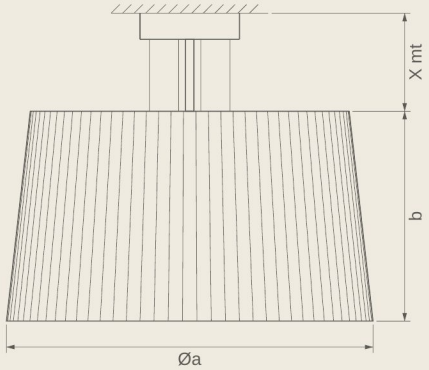


| a | b |
|---|---|
| Ø450 | 260 |
| Ø700 | 400 |

Soullight
LIGHTING & PROJECTS









*Pendant*

# *Aurica*

| TR / EN / FR | |
|---|---|
| ÖLÇÜ / DIMENSION / MESURES | 700/1000 × 250/300 mm |
| GÜÇ / CONSUMPTION / CONSOMMATION | 26 W |
| IŞIK AKISI / LUMINOUS FLUX / FLUX LUMINEUX | 1300 lm |
| OPTİK / OPTICS / OPTIQUE | Opal Diffuser |
| KORUMA / PROTECTION / PROTECTION | IP20 · IK02 · Class II |



SOULLIGHT — AKUSTİK KOLEKSİYON

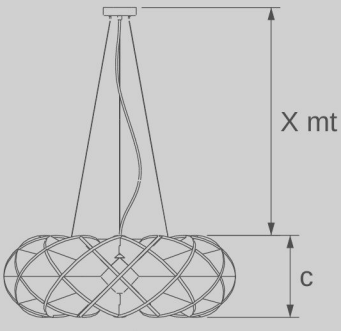


a b c
Ø700 / Ø250 / 250
Ø1000 / Ø450 / 300

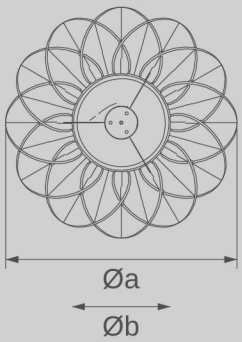

Soullight
LIGHTING & PROJECTS

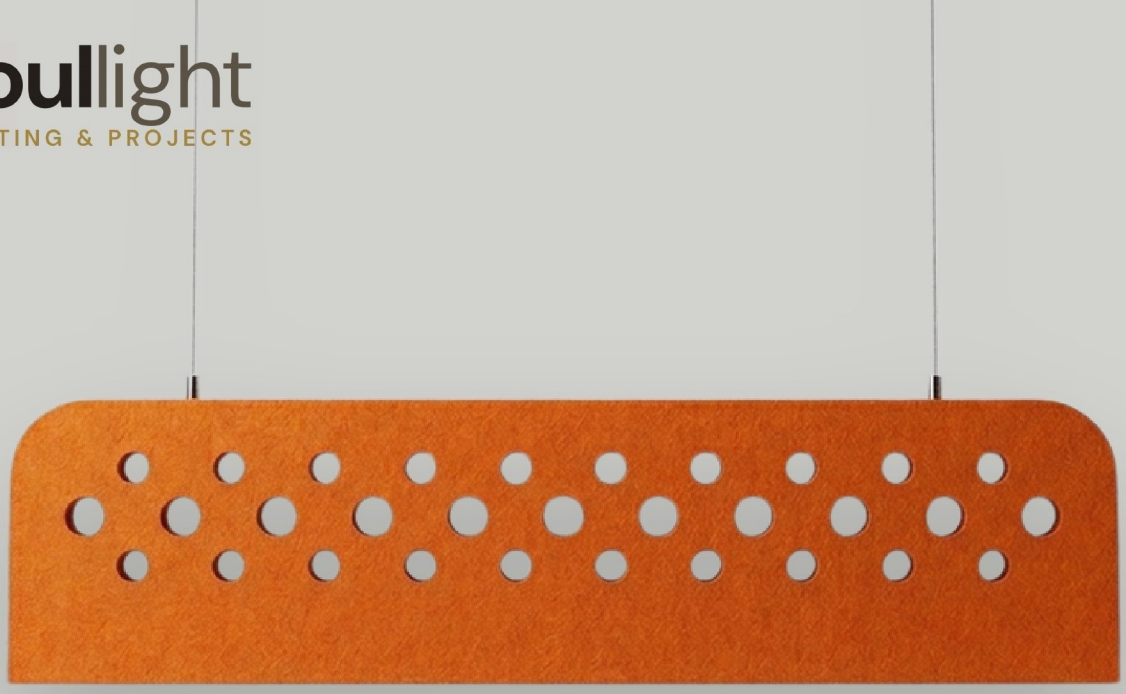



*Direct - Indirect*

# *Portico*

| TR / EN / FR | |
|---|---|
| ÖLÇÜ / DIMENSION / MESURES | 1160 × 46 x 300 mm |
| GÜÇ / CONSUMPTION / CONSOMMATION | 36 W + 16W |
| IŞIK AKISI / LUMINOUS FLUX / FLUX LUMINEUX | 3600 + 1280 lm |
| OPTİK / OPTICS / OPTIQUE | 36° - 48° / Indirect |
| KORUMA / PROTECTION / PROTECTION | IP20 · IK02 · Class II |



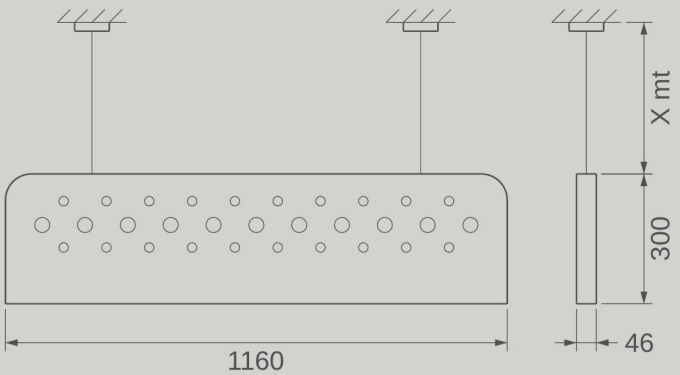



*Pendant*

# *Spira*

| TR / EN / FR | |
|---|---|
| ÖLÇÜ / DIMENSION / MESURES | **400 × 480 mm** |
| GÜÇ / CONSUMPTION / CONSOMMATION | **Optional** |
| IŞIK AKISI / LUMINOUS FLUX / FLUX LUMINEUX | **Opitonal** |
| OPTİK / OPTICS / OPTIQUE | **E27** |
| KORUMA / PROTECTION / PROTECTION | **IP20 · IK02 · Class II** |



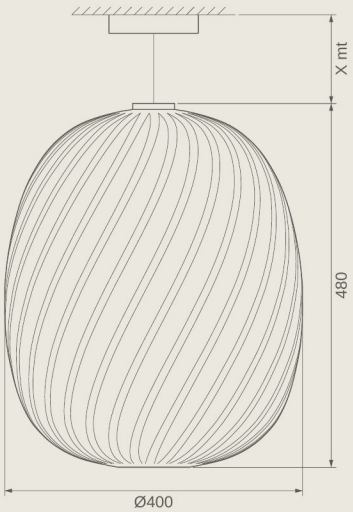

Soullight
LIGHTING & PROJECTS



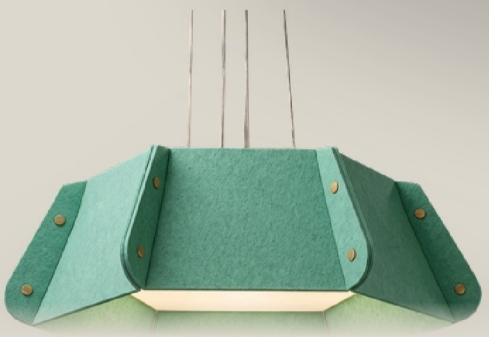

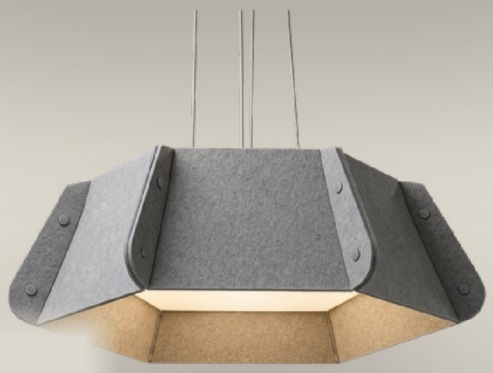



# *Pendant*

# *Hexa*

| TR / EN / FR | |
|---|---|
| ÖLÇÜ / DIMENSION / MESURES | 600 × 300 mm |
| GÜÇ / CONSUMPTION / CONSOMMATION | 35 W |
| IŞIK AKISI / LUMINOUS FLUX / FLUX LUMINEUX | 2500 lm |
| OPTİK / OPTICS / OPTIQUE | Opal Diffuser |
| KORUMA / PROTECTION / PROTECTION | IP20 · IK02 · Class II |



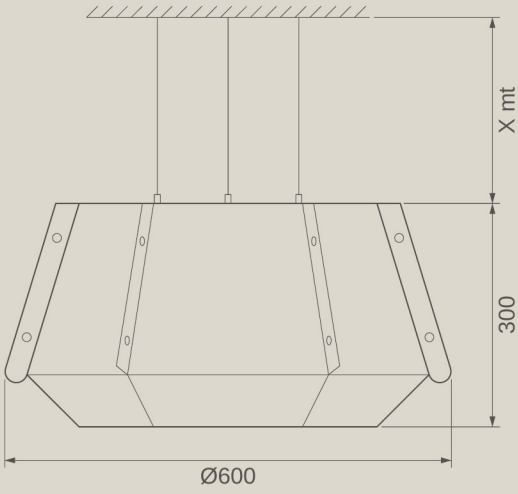

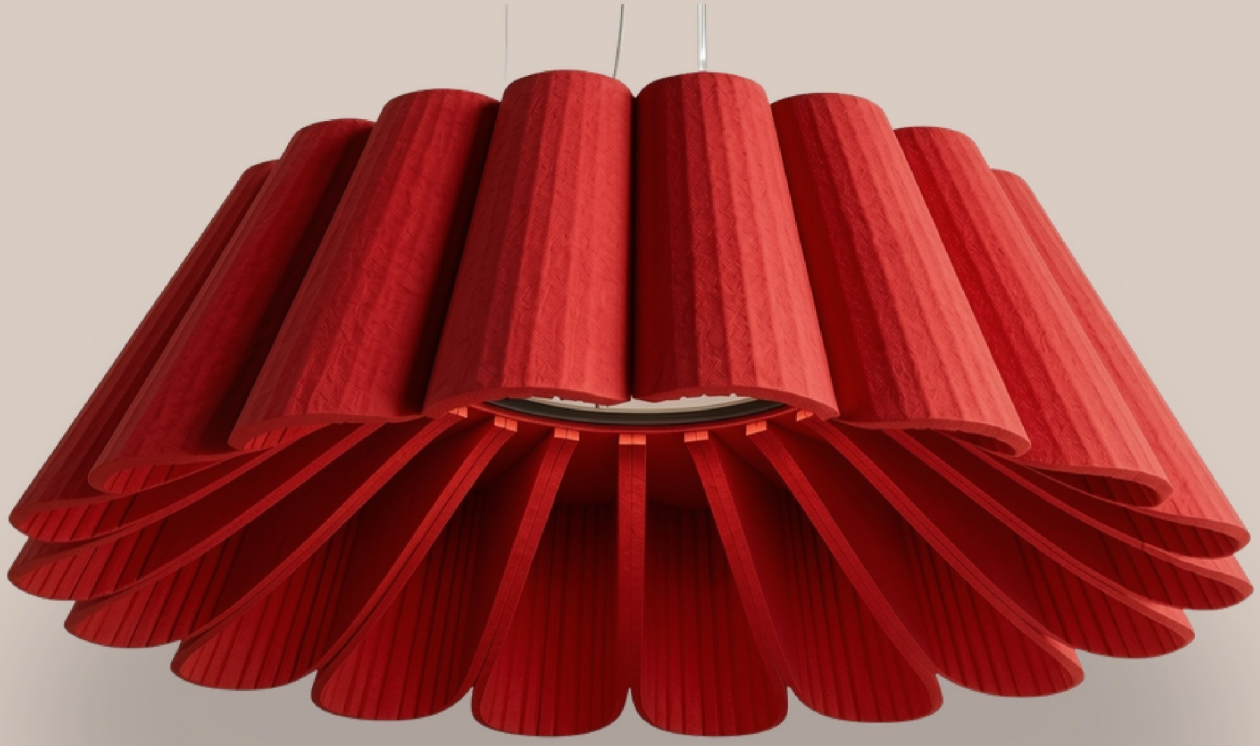

*Pendant*

# *Petalo*

| TR / EN / FR | |
|---|---|
| ÖLÇÜ / DIMENSION / MESURES | 800 × 255 mm |
| GÜÇ / CONSUMPTION / CONSOMMATION | 22 W |
| IŞIK AKISI / LUMINOUS FLUX / FLUX LUMINEUX | 2000 lm |
| OPTİK / OPTICS / OPTIQUE | Opal Diffuser |
| KORUMA / PROTECTION / PROTECTION | IP20 · IK02 · Class II |



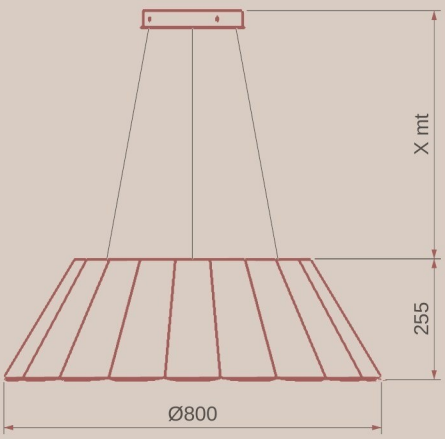

Soullight
LIGHTING & PROJECTS



*Pendant*

# *Plisse*

| TR / EN / FR | |
|---|---|
| ÖLÇÜ / DIMENSION / MESURES | 760 × 400 mm |
| GÜÇ / CONSUMPTION / CONSOMMATION | 26 W |
| IŞIK AKISI / LUMINOUS FLUX / FLUX LUMINEUX | 2600 lm |
| OPTİK / OPTICS / OPTIQUE | 24° - 36° |
| KORUMA / PROTECTION / PROTECTION | IP20 · IK02 · Class II |



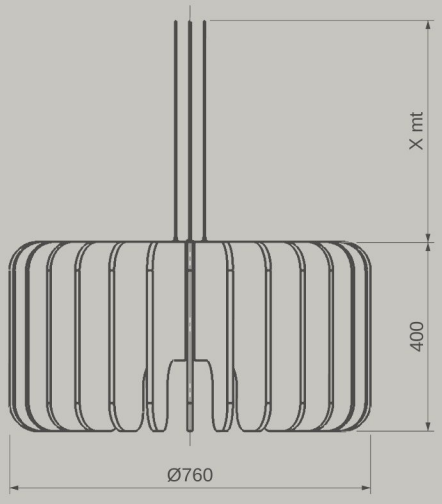

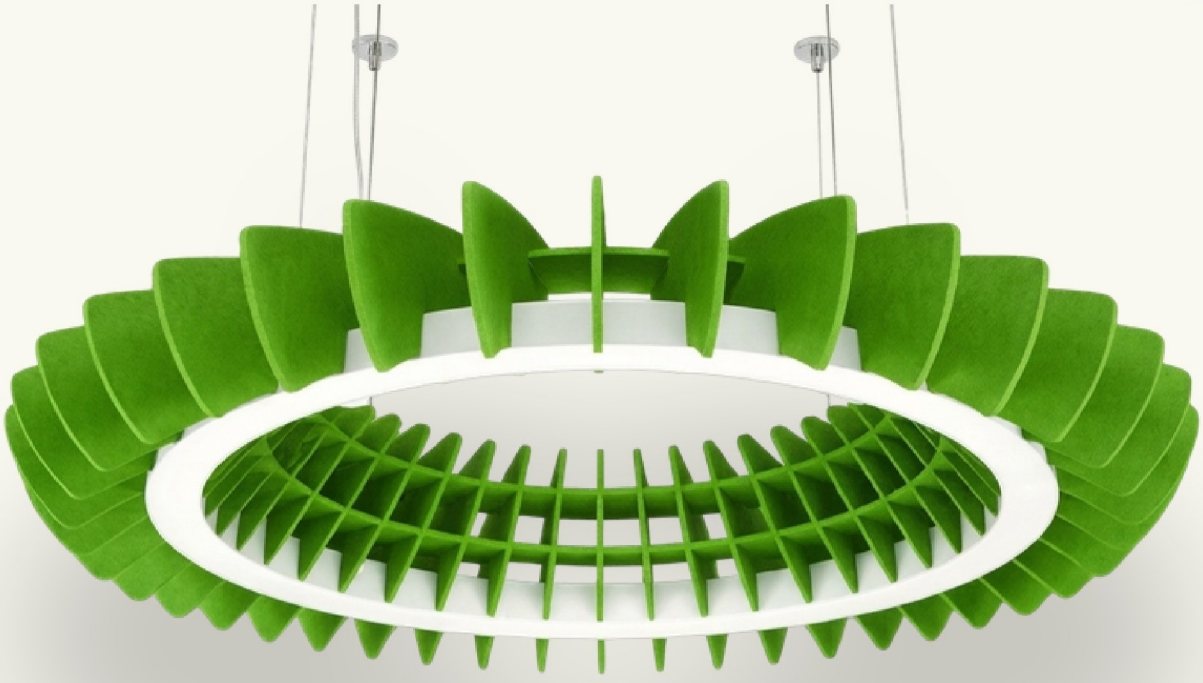

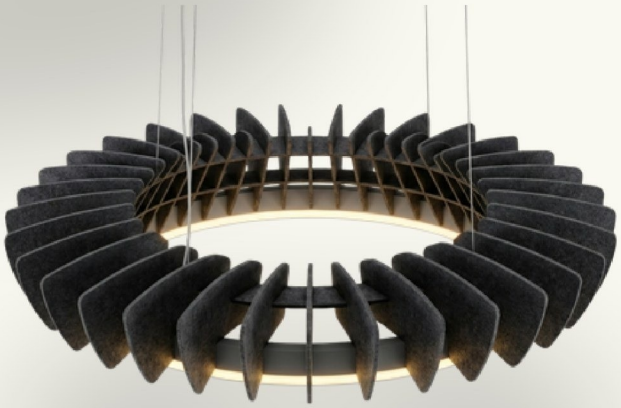

*Pendant*

# *Corona*

| TR / EN / FR | |
|---|---|
| ÖLÇÜ / DIMENSION / MESURES | 1500/1800 × 400 mm |
| GÜÇ / CONSUMPTION / CONSOMMATION | 40/75 · 55/100 W |
| IŞIK AKISI / LUMINOUS FLUX / FLUX LUMINEUX | 4000/7500 · 5500/10000lm |
| OPTİK / OPTICS / OPTIQUE | Opal Diffuser |
| KORUMA / PROTECTION / PROTECTION | IP20 · IK02 · Class II |



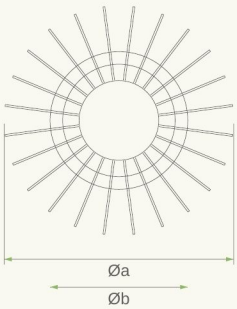


| a | b |
|---|---|
| Ø1500 / | Ø900 |
| Ø1800 / | Ø1200 |

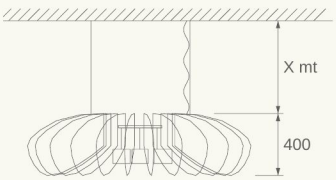

Soullight
LIGHTING & PROJECTS





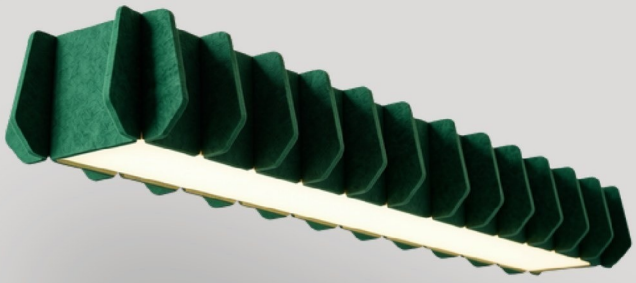

*Pendant/Surface*

# *Linea*

| TR / EN / FR | |
|---|---|
| ÖLÇÜ / DIMENSION / MESURES | **850/1500 × 150 x 200 mm** |
| GÜÇ / CONSUMPTION / CONSOMMATION | **20 · 39 W** |
| IŞIK AKISI / LUMINOUS FLUX / FLUX LUMINEUX | **2000 · 3900 lm** |
| OPTİK / OPTICS / OPTIQUE | **Opal Diffuser** |
| KORUMA / PROTECTION / PROTECTION | **IP20 · IK02 · Class II** |



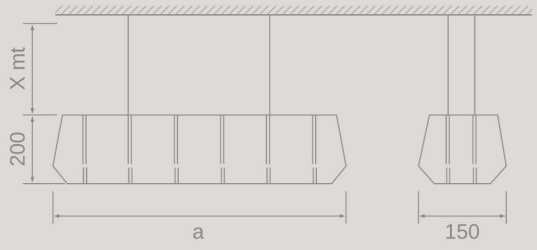


| a |
|---|
| 850 |
| 1500 |





*Pendant*

# *Falda*

| TR / EN / FR | |
|---|---|
| ÖLÇÜ / DIMENSION / MESURES | 600 × 420 mm |
| GÜÇ / CONSUMPTION / CONSOMMATION | 35 · 50 W |
| IŞIK AKISI / LUMINOUS FLUX / FLUX LUMINEUX | 2800 · 4000 lm |
| OPTİK / OPTICS / OPTIQUE | Opal Diffuser |
| KORUMA / PROTECTION / PROTECTION | IP20 · IK02 · Class II |



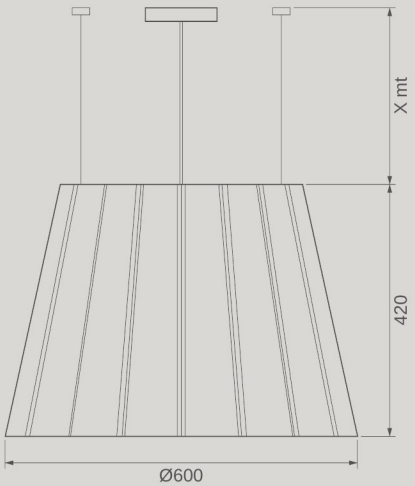

Soullight
LIGHTING & PROJECTS





*Pendant*

# *Tronco*

| TR / EN / FR | |
|---|---|
| ÖLÇÜ / DIMENSION / MESURES | 600/740 × 300 mm |
| GÜÇ / CONSUMPTION / CONSOMMATION | 24 W |
| IŞIK AKISI / LUMINOUS FLUX / FLUX LUMINEUX | 2400 lm |
| OPTİK / OPTICS / OPTIQUE | Opal Diffuser |
| KORUMA / PROTECTION / PROTECTION | IP20 · IK02 · Class II |



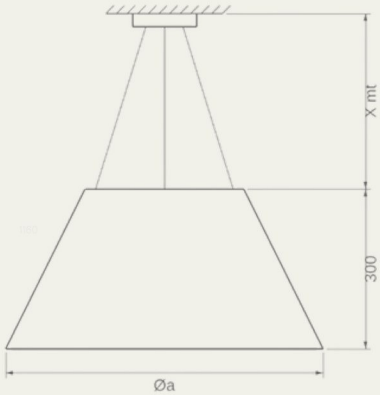


a
Ø600
Ø740



*Pendant*

# *Alare*

| TR / EN / FR | |
|---|---|
| ÖLÇÜ / DIMENSION / MESURES | 1870 × 190 x 150 mm |
| GÜÇ / CONSUMPTION / CONSOMMATION | 60 W |
| IŞIK AKISI / LUMINOUS FLUX / FLUX LUMINEUX | 4500 lm |
| OPTİK / OPTICS / OPTIQUE | Opal Diffuser |
| KORUMA / PROTECTION / PROTECTION | IP20 · IK02 · Class II |











*Wall / Surface*

# *Onda*

| TR / EN / FR | |
|---|---|
| ÖLÇÜ / DIMENSION / MESURES | 1000 × 300 mm |
| GÜÇ / CONSUMPTION / CONSOMMATION | 35 · 50 W |
| IŞIK AKISI / LUMINOUS FLUX / FLUX LUMINEUX | 3000 · 4200 lm |
| OPTİK / OPTICS / OPTIQUE | Opal Diffuser |
| KORUMA / PROTECTION / PROTECTION | IP20 · IK02 · Class II |



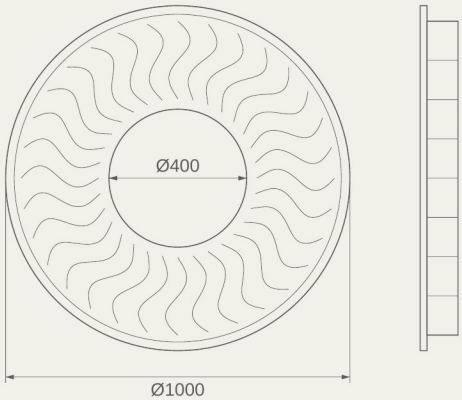

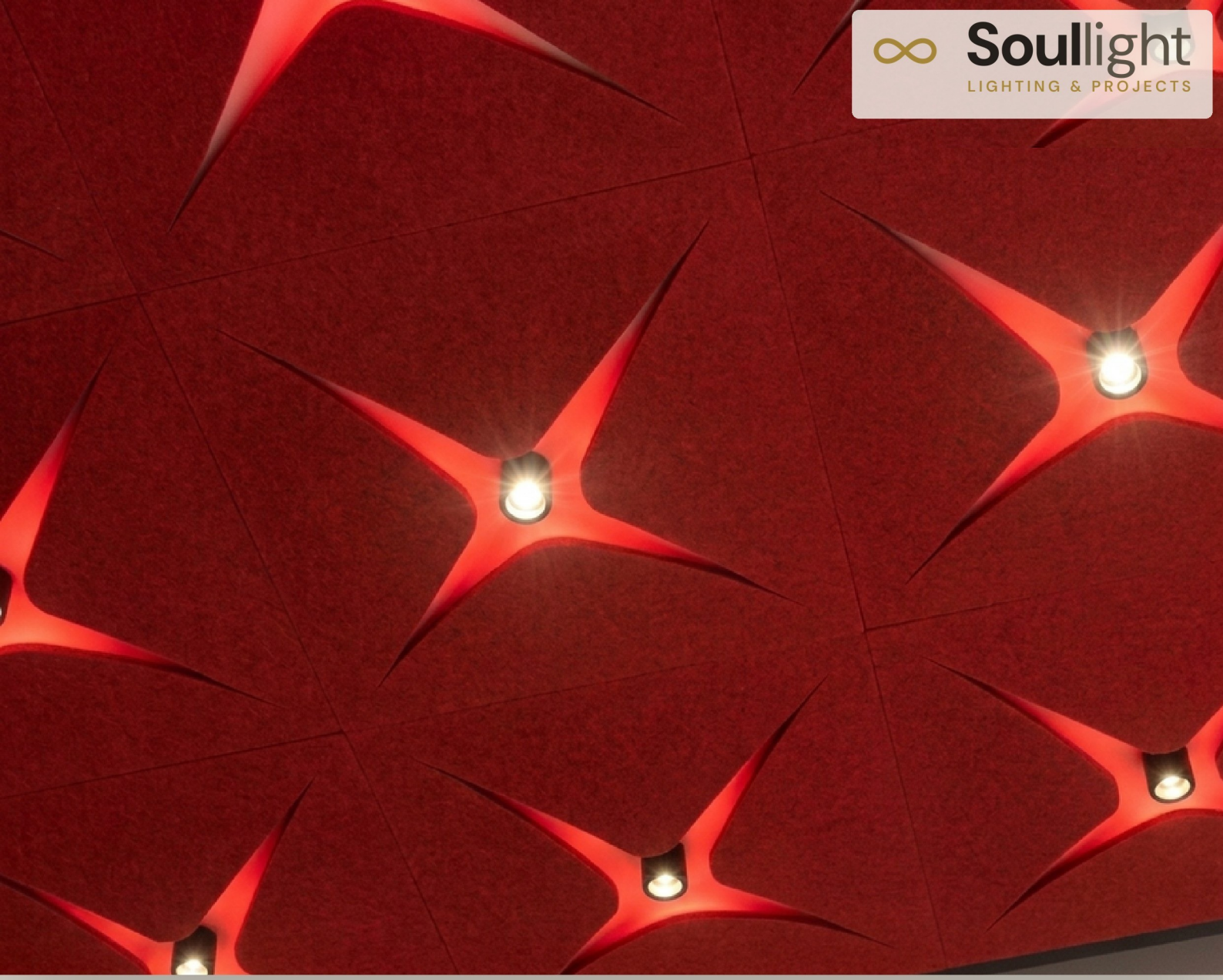

# *Ceiling*
# *Astra*

| TR / EN / FR | |
|---|---|
| ÖLÇÜ / DIMENSION / MESURES | 595 × 595 x 95 mm |
| GÜÇ / CONSUMPTION / CONSOMMATION | 12 W |
| IŞIK AKISI / LUMINOUS FLUX / FLUX LUMINEUX | 800 lm |
| OPTİK / OPTICS / OPTIQUE | 24° - 36° |
| KORUMA / PROTECTION / PROTECTION | IP20 · IK02 · Class II |



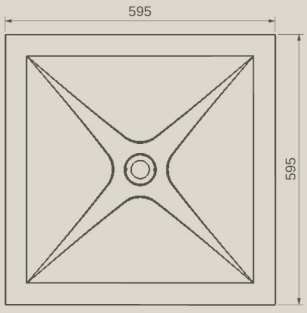




Soullight
LIGHTING & PROJECTS



*Wall*

# *Racimo*

| TR / EN / FR | |
|---|---|
| ÖLÇÜ / DIMENSION / MESURES | **1415 × 1855 x 48 mm** |
| GÜÇ / CONSUMPTION / CONSOMMATION | **Optional** |
| IŞIK AKISI / LUMINOUS FLUX / FLUX LUMINEUX | **Optional** |
| OPTİK / OPTICS / OPTIQUE | **Opal Diffuser** |
| KORUMA / PROTECTION / PROTECTION | **IP20 · IK02 · Class II** |



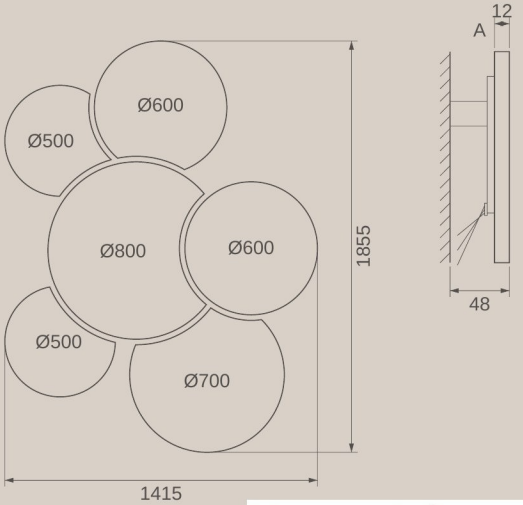



# *Wall*

# *Trifoglio*

| TR / EN / FR | |
|---|---|
| ÖLÇÜ / DIMENSION / MESURES | 420 × 460 mm |
| GÜÇ / CONSUMPTION / CONSOMMATION | Optional |
| IŞIK AKISI / LUMINOUS FLUX / FLUX LUMINEUX | Optional |
| OPTİK / OPTICS / OPTIQUE | Opal Diffuser |
| KORUMA / PROTECTION / PROTECTION | IP20 · IK02 · Class II |

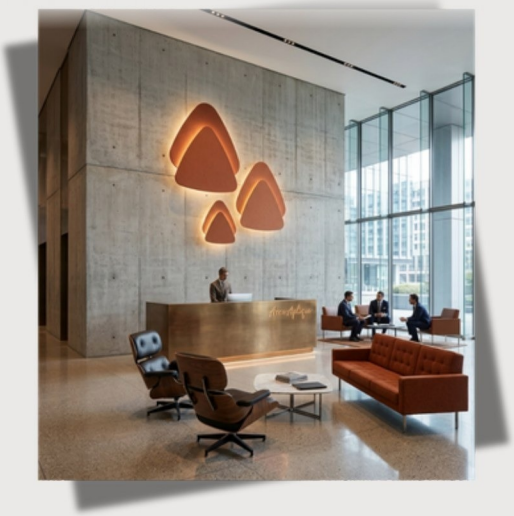

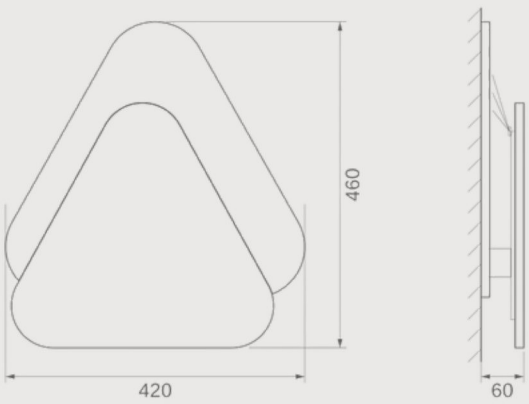

Soullight
LIGHTING & PROJECTS

## Pendant

# Piano



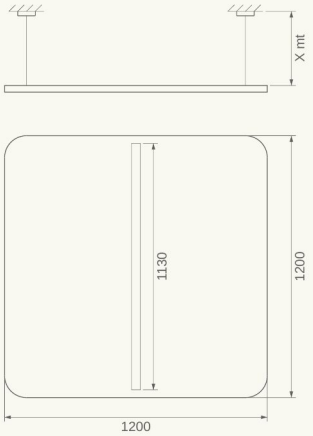


| TR / EN / FR | |
|---|---|
| ÖLÇÜ / DIMENSION / MESURES | **1200 × 1200 mm** |
| GÜÇ / CONSUMPTION / CONSOMMATION | **25 W** |
| IŞIK AKISI / LUMINOUS FLUX / FLUX LUMINEUX | **2500 lm** |
| OPTİK / OPTICS / OPTIQUE | **Opal Diffuser** |
| KORUMA / PROTECTION / PROTECTION | **IP20 · IK02 · Class II** |

## Pendant/Surface

# Quies



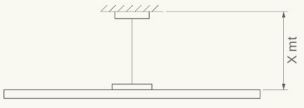


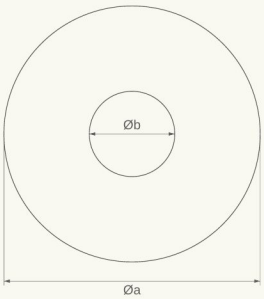


a b
Ø900 / Ø300
Ø1200 / Ø400

| TR / EN / FR | |
|---|---|
| ÖLÇÜ / DIMENSION / MESURES | **900/1200 × 300/400 mm** |
| GÜÇ / CONSUMPTION / CONSOMMATION | **24 W** |
| IŞIK AKISI / LUMINOUS FLUX / FLUX LUMINEUX | **2800 lm** |
| OPTİK / OPTICS / OPTIQUE | **Opal Diffuser** |
| KORUMA / PROTECTION / PROTECTION | **IP20 · IK02 · Class II** |

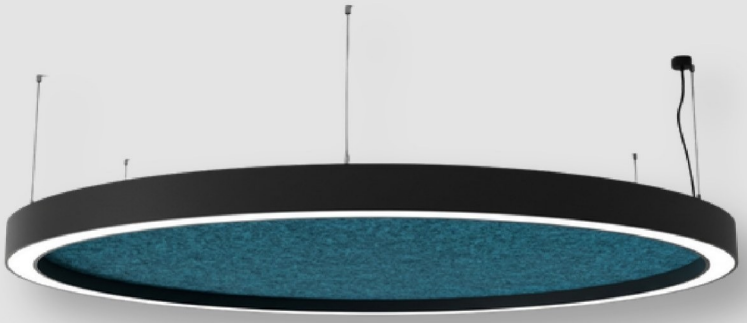

# Halo Felt

| TR / EN / FR | |
|---|---|
| ÖLÇÜ / DIMENSION / MESURES | 600/900/1200 x 80mm |
| GÜÇ / CONSUMPTION / CONSOMMATION | 38 · 52· 65 W |
| IŞIK AKISI / LUMINOUS FLUX / FLUX LUMINEUX | 3800 · 5200 · 6500 lm |
| OPTİK / OPTICS / OPTIQUE | Opal Diffuser |
| KORUMA / PROTECTION / PROTECTION | IP20 · IK02 · Class II |

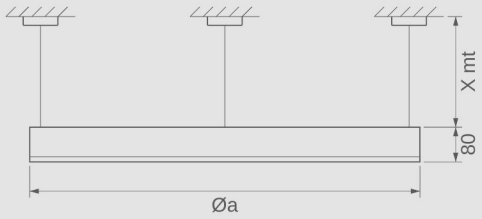


a
Ø600
Ø900
Ø1200

Direct/Indirect

# Quadra Felt



| TR / EN / FR | |
|---|---|
| ÖLÇÜ / DIMENSION / MESURES | 610/890/1170 x 70 mm |
| GÜÇ / CONSUMPTION / CONSOMMATION | 52 · 78 · 104 W |
| IŞIK AKISI / LUMINOUS FLUX / FLUX LUMINEUX | 5200 · 7800 · 10400 lm |
| OPTİK / OPTICS / OPTIQUE | Opal Diffuser |
| KORUMA / PROTECTION / PROTECTION | IP20 · IK02 · Class II |

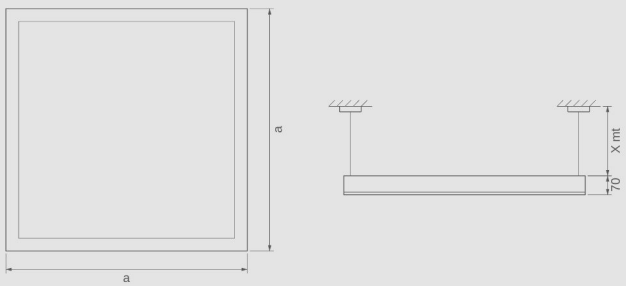


a
610
890
1170

Soullight
LIGHTING & PROJECTS

*Direct/Indirect*

# *Halo Moss*



| TR / EN / FR | |
|---|---|
| ÖLÇÜ / DIMENSION / MESURES | **600/900 × 80 mm** |
| GÜÇ / CONSUMPTION / CONSOMMATION | **38 · 52 · 65 W** |
| IŞIK AKISI / LUMINOUS FLUX / FLUX LUMINEUX | **3800 · 5200 · 6500 lm** |
| OPTİK / OPTICS / OPTIQUE | **Opal Diffuser** |
| KORUMA / PROTECTION / PROTECTION | **IP20 · IK02 · Class II** |

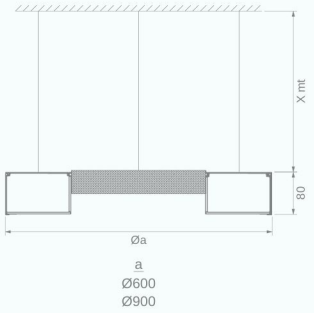


*Pendant*

# *Quadra Moss*



| TR / EN / FR | |
|---|---|
| ÖLÇÜ / DIMENSION / MESURES | **510/890x1170 × 70 mm** |
| GÜÇ / CONSUMPTION / CONSOMMATION | **52 · 78 · 104 W** |
| IŞIK AKISI / LUMINOUS FLUX / FLUX LUMINEUX | **5200 · 7800 · 10400 lm** |
| OPTİK / OPTICS / OPTIQUE | **Opal Diffuser** |
| KORUMA / PROTECTION / PROTECTION | **IP20 · IK02 · Class II** |

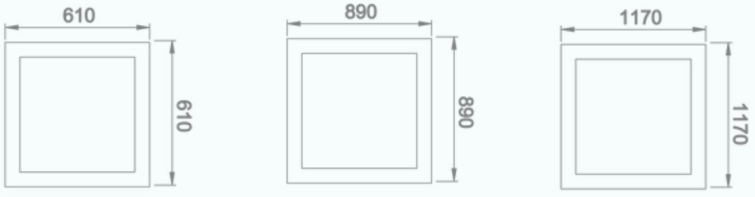

Soullight
LIGHTING & PROJECTS

## Acoustic Felt

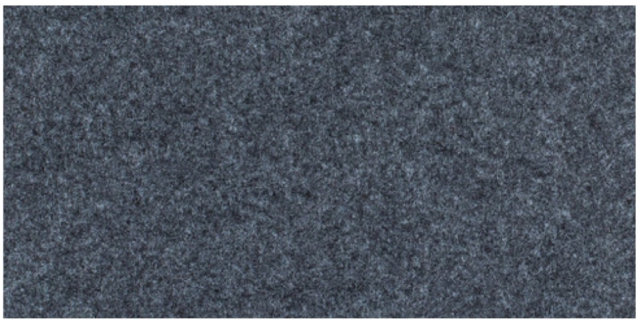

**ANTRASIT GREY**
SLF01

## Colour Scale



**SILVER GREY**
SLF02

## Colour Selection



**BEIGE**
SLC01



**SMOKED**
SLC02



**AUTUMN**
SLC03



**PURPLE**
SLC04

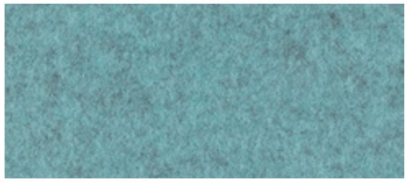

**WATER BLUE**
SLC05



**YELLOW**
SLC06



**ORANGE**
SLC07



**GRASS**
SLC08



**PETROL BLUE**
SLC09



**BLUE**
SLC10



**PINK**
SLC11

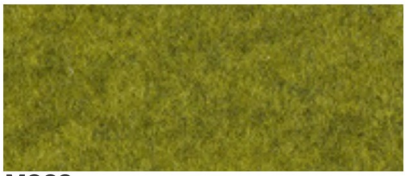

**MOSS**
SLC12



**FLAG RED**
SLC13

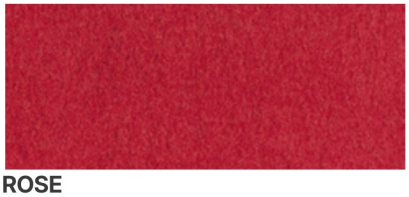

**ROSE**
SLC14



**NAVY BLUE**
SLC15



**BLACK**
SLC16



**BROWNISH**
SLC17



**TILE**
SLC18

# SoulLight

Bright & Quiet

Burcu İlhan
Founder

T +90 533 281 11 29
E burcu@soullight.com.tr